A TREATISE

ON THE

Construction, Proper Use, and Capabilities

OF

SMITH, BECK, AND BECK'S

ACHROMATIC MICROSCOPES.

BY

RICHARD BECK.

LONDON:

PRINTED FOR SMITH, BECK, AND BECK, 31, CORNHILL:

PUBLISHED BY

JOHN VAN VOORST, PATERNOSTER ROW.

MDCCCLXV.

luminous (fig. 5, *f*); and when the prism has turned round 90°, there will be only two images of equal brightness (fig. 5, *g*); continuing the turn, two other faint images will appear; further on the four images will be equal; still further they will be unequal; and at 180° of revolution they will all coalesce into one bright image (fig. 5, *h*).

"*Exp.* 5.—The above results will be rendered more interesting by interposing between the double refractors the film of selenite. Instead of the two white images, as in the preceding experiment, we shall see three, of which the two outer ones will be one colour (say green), and the middle, its complementary colour or red (fig. 6, *i*); by turning the prism nearest the eye, the middle image will gradually divide, until the completion of a quarter revolution, when four images will appear of equal brilliancy, two of each colour (fig. 6, *k*): revolve the prism until the completion of the half-circle, and the three images will reappear, but with different properties, the outer images being red and the middle green (fig. 6, *l*); at another quarter revolution, four images, but with opposite colours, will be observed (fig. 6, *m*), and at the completion of the revolution the original appearance (see fig. 6, *i*).

"In this experiment the relative positions of the double-refracting prisms and the selenite must be carefully observed, as, if the neutral axis of the selenite be parallel or perpendicular to the plane of polarization, no depolarization takes place, and no colours will be produced, the results then appearing as if the selenite were not interposed."

Crystals to show Rings.

The systems of coloured rings, produced by crystals cut perpendicularly to their axes, can also be beautifully shown

in the microscope with polarized light; they are best seen by placing the polarizer (Plate XVI. figs. 2 or 3) under the stage, and employing a low-power object-glass; it is usual to place the crystal over a No. 2 eyepiece, made without a stop; and either a short prism or a tourmaline may be used as an analyzer over the crystal. Plate XVIII. fig. 10 shows the appearance of calc-spar under such circumstances.

The following is a list of the most interesting specimens, each of which is generally mounted in a brass fitting, as shown in Plate XVI. fig. 28.

List of Crystals.

Quartz, right-handed.	Nitre.
Quartz, left-handed.	Topaz.
Calc-spar.	Sugar.
Borax.	Arragonite.

Wenham's Binocular Microscope.

Wenham's binocular microscope is now so well known, that it may appear hardly necessary to occupy a portion of these pages with any explanation or defence of its principle; but binocular vision itself, as well as this particular application of it, still meets with such strong opposition from many microscopists, that we venture to give with some minuteness a few facts connected with the subject, and, more especially, because we consider Wenham's binocular body to be the most valuable addition to the compound microscope since the perfecting of the object-glasses by Mr. Lister.

That binocular vision is advantageous, if not necessary, is quite sufficiently proved by the fact of our having two eyes, and it is also known that the stereoscopic effect conveyed to the mind increases as the object approaches the eyes; consequently, when the simple design of the

PLATE XVI.

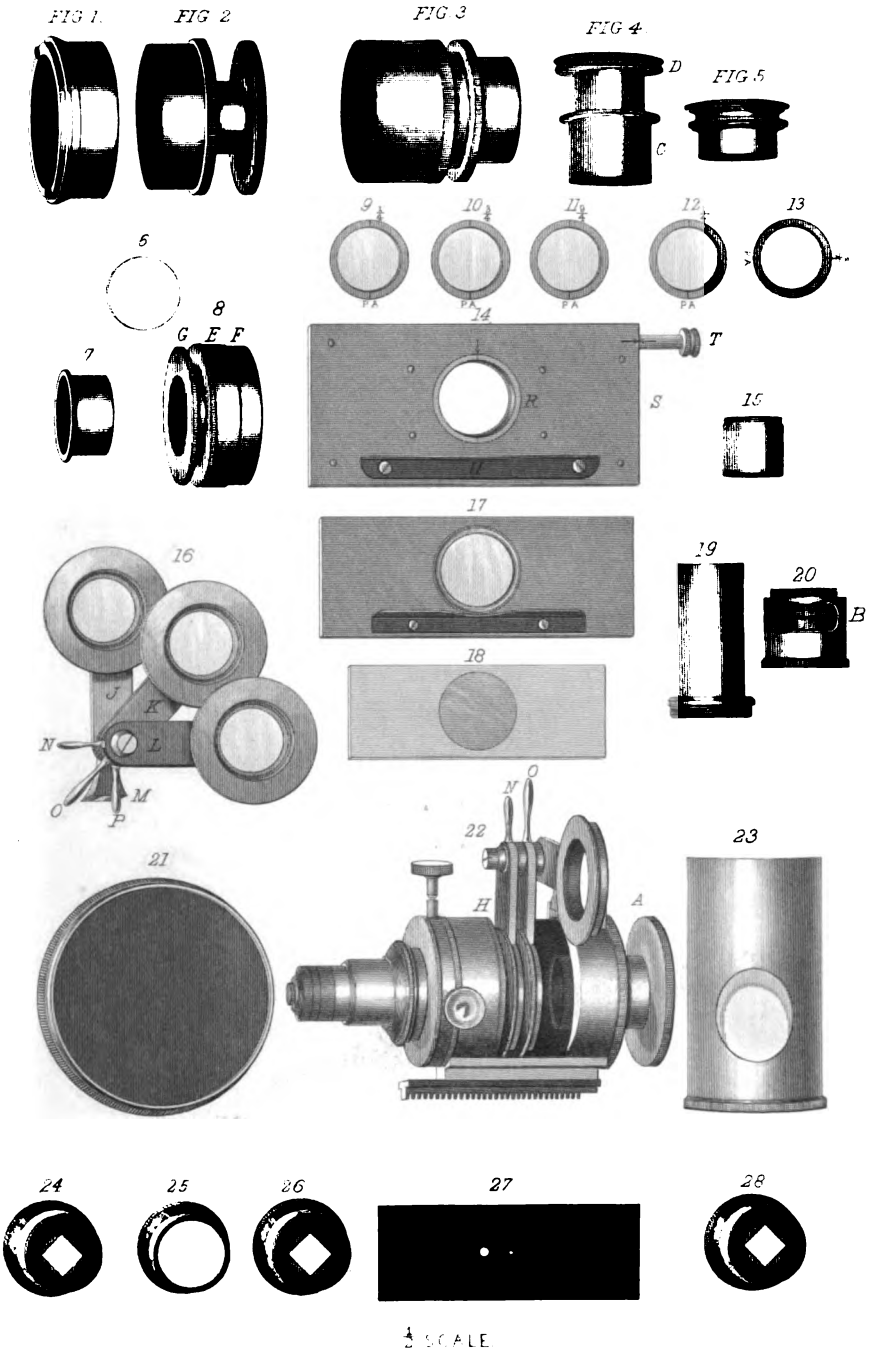

½ SCALE

S Allen Sc

Description of Plate XVIII.

ILLUSTRATIONS OF EXPERIMENTS WITH DOUBLE-IMAGE PRISMS.

Fig. 1. The appearance of three small holes when a double-image prism is placed over the eyepiece.

Fig. 2. The same as fig. 1, with the addition of a polarizer and an interposed plate of selenite. Where the larger images overlap, the complementary tints form white light.

Fig. 3. The change that takes place in the double image, at four equal points, in one revolution of the polarizer.

Fig. 4. The same experiment as that shown in fig. 3, but with the interposition of a plate of selenite.

Fig. 5. The appearances of a small hole, without a polarizer, but with two double-refracting prisms placed over the eyepiece; and the changes that take place when one of the prisms is moved round to four equal points in one revolution.

Fig. 6. The same experiment as fig. 5 repeated, with the addition of a polarizer and interposed plate of selenite.

Fig. 7. A diagram to show when the Nicol's prism is adjusted with its acute angles parallel with the sides of the stage.

Fig. 8. A diagram to show the natural flaws or veins in the selenite plate, and the position in which the greatest amount of depolarization may be obtained.

Fig. 9. A diagram to show when the Nicol's prism is turned 45 degrees from the position shown in fig. 7, and when no depolarization will take place.

Fig. 10. The black cross and coloured rings produced by a piece of calc-spar when its surfaces are cut perpendicular to the axis of the crystal, and when placed under polarized light, by fitting over the cap of the eyepiece of the microscope with an analyzer above.

PLATE XVIII